TVGP-P01-0802-DOM-G

TruVision™ 8MP, Extreme Low Light, IP Dome Camera, 8-32 mm Lens, grey

Overview

The TruVision P Series IP dome cameras have a rich set of features which make them ideal for demanding security, surveillance, and monitoring applications such as commercial, retail and large projects. With smart event capabilities available in 4 and 8MP 4K resolutions delivering high-quality images thanks to their extreme low light sensitivity brings clear visibility even in the dark and enhanced image processing.

The cameras support up to 4 configurable video streams which allow users to optimize the cameras remote live view capabilities while controlling the bandwidth usage. The motorized varifocal lens with P-iris technology allows users to remotely adjust the zoom level and focus to get crisp images anytime anywhere. In addition to the compatibility with other TruVision products and 3rd party VMS software, the cameras also support NAS recording or local MicroSD card recording to protect data in the event of network disruptions.

The cameras go above and beyond standard motion detection with enhanced alarm capabilities, including cross line detection, intrusion detection, region entrance, region exit and face capture features. With its smart person/vehicle filter feature the camera can ignore irrelevant motion or VCA events which will automatically lead to less storage consumption and faster retrieval of relevant video events.



Details

- Maximum resolution: 3840 × 2160
- H.265(+), H.264(+) and MJPEG compression
- 4 independent configurable video streams
- Motorized zoom lens 8 to 32 mm with auto-focus
- Up to 50 m IR illumination
- P-iris lens
- ONVIF Profiles S, G and T
- Rich video intelligence (VCA)
- Up to 120 dB Wide Dynamic Range
- Edge recording up to 256 GB with optional SD card

TVGP-P01-0802-DOM-G

TruVision™ 8MP, Extreme Low Light, IP Dome Camera, 8-32 mm Lens, grey

Technical specifications

General

Technology	IP
Video standard	NTSC, PAL
Image settings	De-Fog, Vue du couloir, Miroir, Région d'intérêt (ROI)
Privacy masking	Yes
Software compatibility	Milestone XProtect, OnGuard, TruVision Navigator, TVRmobile, Logiciel de navigation

Camera

Sensor size	1 / 1.8 "
Max. resolution	8 MPX
Sensor scan	Progressif
Sensor type	CMOS
Shutter time	1/3 s to 1/100,000 s

Lighting performance

WDR type	Vrai WDR
WDR	120 dB
Digital noise reduction	3D DNR
Day/night	Vrai jour / nuit
Motorized IR cut filter	Yes
Color sensitivity	Color: 0.004 Lux @ (F1.4, AGC ON),B/W: 0 Lux with IR
Infrared (IR)	Yes
IR range	Up to 50 m
IR wavelength	850 nm

Encoding

Video streams	4
Main stream compression	H.264, H.264+, H.265, H.265+
Sub stream compression	H.264, H.265, M-JPEG
Third stream compression	H.264, H.265
Video bit rate	32 to 16 Mbps
Main stream resolutions	1280 x 720 (XVGA), 1920 x 1080 (1080p), 2688 x 1520, 3200 x 1800, 3840 x 2160
Sub stream resolutions	1280 x 720 (XVGA), 640 x 360 (nHD), 640 x 480 (VGA)
Third stream resolutions	1280 x 720 (XVGA), 1920 x 1080 (1080p), 640 x 360 (nHD), 640 x 480 (VGA)
4th stream compression	H.265, H.264, MJPEG
4th stream resolutions	640 x 360 (nHD), 640 x 480 (VGA), 1280 x 720 (XVGA),
Max. resolution @ fps	3840 × 2160 @ 25/30 fps

Lens

Lens type	Varifocale motorisée
Focal length	8 to 32 mm: horizontal FoV 41.8 to 15°, vertical FoV 22.9 to 8.5°, diagonal FoV 48.7 to 17.1°
Auto focus	Yes
Motorized zoom	Yes
Auto-iris	P-iris

DORI

Detection	218 to 580 m
Observation	86.5 to 230.2 m
Recognition	43.6 to116 m
Identification	21.8 to 58 m

Network

Network interface	RJ-45 10/100 Mbit/s auto-adaptable interface Ethernet
Integration	CGI, ISAPI, ONVIF profil G, ONVIF profil S, ONVIF Profile T
Supported network protocols	802.1x, Bonjour, DDNS, DHCP, DNS, FTP, HTTP, HTTPS, ICMP, IGMP, IPv4, IPv6, NTP, PPPoE, Qos, RTCP, RTP, RTSP, SMTP, SNMP, TCP/IP, UPnP

Audio

Audio compression	G.711alaw, G.711ulaw, G.722.1, G.726, MP2L2, MP3, PCM
Audio in	1 input (line in), terminal block, max. input amplitude: 3.3 Vpp, input impedance: 4.7 KΩ,
Audio out	1 output (line out), terminal block, max. output amplitude: 3.3 Vpp, output impedance: 100 Ω

Alarm I/O

Alarm inputs	2
Alarm outputs	2 outputs (24 VAC/VDC, 1A max)

Storage

Local storage support	Yes
Local storage type	Built-in Micro SD/SDHC/SDXC card slot
Max. SD card capacity	256 GB

Video intelligence

Alarm trigger	HDD error, HDD full, Invalid login, IP address conflict, Network disconnected, Sabotage
ROI	5 fixed regions for main stream and sub-stream
Smart event	Détection de mouvement avancée, Audio exception detection, Mise au point, Face capture, Détection d'intrusion, Détection de passage à niveau, Détection de suppression d'objet, People counting, People management, Détection d'entrée région, Détection de région de sortie, Changement de scène, Unattended baggage detection
Intelligence options	Person/vehicle detection on motion, line crossing, intrusion detection, region entrance detection and region exit detection

Electrical

Operating voltage	12 VDC ± 25%, 0.9 A, 24 VAC ± 20%, 0.75 A, two-core terminal block, PoE: 802.3af, Class 3, 36 V to 57 V, 0.36 A to 0.23 A
Power consumption	12 VDC, 0.9 A, max. 10.8 W, 24 VAC, 0.75 A, max. 10.8 W, PoE: 802.3at, max. 12.9 W

TVGP-P01-0802-DOM-G

TruVision™ 8MP, Extreme Low Light, IP Dome Camera, 8-32 mm Lens, grey

Physical

Physical dimensions	Ø162 × 141.8 mm Ø6.4 × 5.6 in.
Net weight	1420 g 3.1 lb.
Shipping weight	2058 g 4.5 lb.
Colour	Grå
Form Factor	Dome

Environmental

Vandal proof	Yes
Impact rating	IK10
Environment	Udendørs
Operating temperature	-40 to +60°C -40 to +140°F
Relative humidity	<95% noncondensing
IP rating	IP67

Regulatory

Compliancy	CE, FCC, REACH, RoHS, UL, WEEE

Compatible products

Category	Reference	Description
Brackets & Mounts	TVD-CB9	TruVision Cup Base for S7 outdoor dome camera
Brackets & Mounts	TVD-CBW	TruVision wall mount bracket compatible with TruVision Cup Bases TVx-CBx
Brackets & Mounts	TVD-M-PMA-SS	TruVision Pole Mount Adaptor, stainless steel
Brackets & Mounts	TVD-PPB	TruVision Dome Pendant Ceiling mount bracket for TVD-CBx, TVF-CBM
Brackets & Mounts	TVD-SNB-BB	TruVision TVD-SNB back box, 4-directional conduit, indoor & outdoor

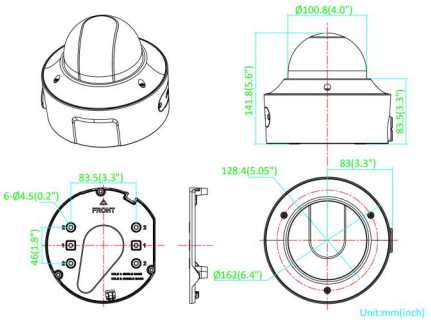

As a company of innovation, Kidde Global Solutions reserves the right to change product specifications without notice. For the latest product specifications, visit firesecurityproducts.com online or contact your sales representative.

Last updated on 24 August 2026 - 17:39