ACA-CE03-100

LHD Cable Accessory - Clip "Edge", (Sp Steel) 3-8mm (2/16") - Pack of 100

Edge Clip

The ACA-CE series "Edge" clip is designed to secure linear heat sensor cable to metal structures such as girders, steel sections, angle bars, floating roof storage tank rim seals, foam dams etc. It is available to mount on steelwork of differing thickness and provides a stand-off for the sensor cable ensuring rapid response.

Installation

A fixing hole in the clip allows the securing of the sensor cable. The sensor cable should be secured to the clip with a silicone sleeve (ACA-RS) and tie wrap (ACA-TW) of suitable rating.

The fixing hole can also allow the fixing of a distance piece (I-Bracket) to extend the position of the sensor cable.

Recommended spacing: 1m

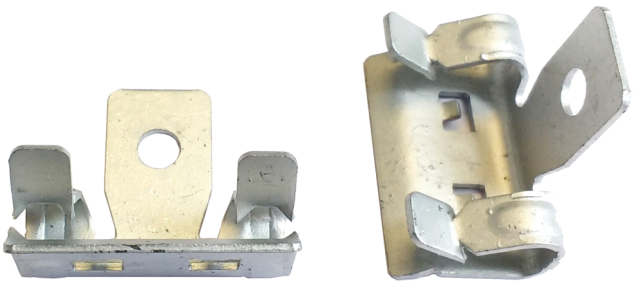

Details

- Easy installation of linear heat cable
- For use on metal structures like girders, steel sections, angle bars, floating roof storage tank rim seals, foam dams etc.
- Excellent resistance to corrosion and heat
- Available in spring steel
- Available in quantities of 100

ACA-CE03-100

LHD Cable Accessory - Clip "Edge", (Sp Steel) 3-8mm (2/16") - Pack of 100

Technical specifications

Physical

Physical dimensions	18 x 20 mm (0.7 x 0.8")
Net weight	1.7 kg 3.7 lbs
Material (body)	Acciaio per molle

Environmental

Environment	Indendør, Udendørs

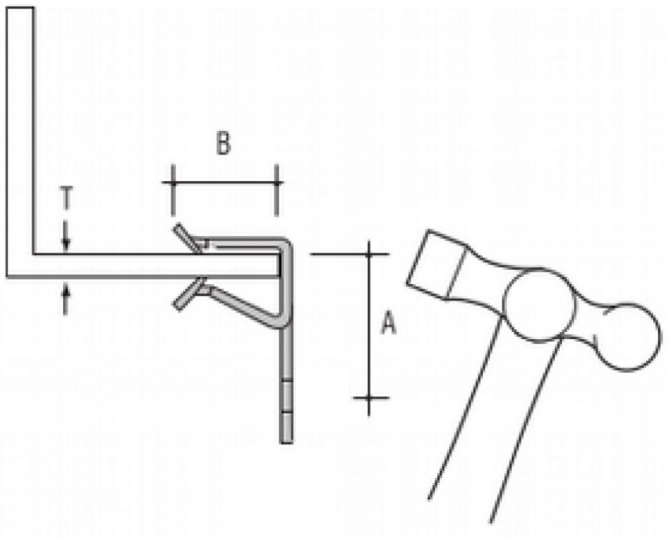

As a company of innovation, Kidde Global Solutions reserves the right to change product specifications without notice. For the latest product specifications, visit firesecurityproducts.com online or contact your sales representative.

Last updated on 4 January 2024 - 13:51