N-MC-S-G

Intelligent MCP accessory - trim skirt - green

General

The N-MC-S-G is an surface mount accessory for compatible manual call points. It offers the possibility to cover unsightly gaps between the wall and a recess mount manual call point for recess mount applications when the holes in the wall are not perfectly cut. With its matching green colour and same aesthetic design as the manual call point, it finishes off any recess mount application beautifully.

Installation

The N-MC-S-G requires no special tools or additional parts for installation. It is simply placed between the manual call point front and the wall for most standard applications, and attaches with the same screws that normally fits the manual call point to its standard back box. If special mounting options are required with other fitment locations for other types of wall boxes, the trim skirt may be paired with a recess mount adaptor allowing additional fitment options for installations on most high quality European wall boxes.

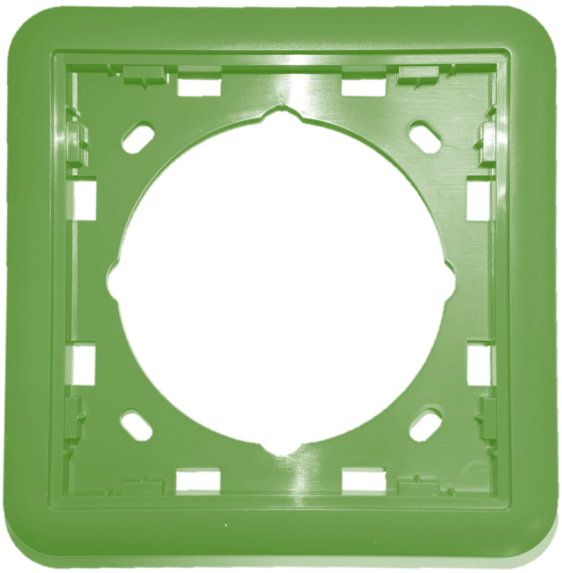

Details

- Covers uneven cut holes in the wall when recessed wall boxes are used
- Matches the colour and design of the manual call point allowing for an aesthetic, integrated look
- Various mounting options allow for an easy fit with most European wall boxes
- Pairs with manual call point recess mount accessory for use with 3rd party back boxes

N-MC-S-G

Intelligent MCP accessory - trim skirt - green

Technical specifications

General

Compatibility	Excellence, NC & Ziton series MCPs

Physical

Physical dimensions	108.1 x 108.1 x 8 mm (L x W x D)
Colour	Zielony
Mounting type	Vægmontering
Material (body)	Noryl SE100 (samogasnący)

Environmental

Vandal proof	No
Environment	Indendør

Regulatory

Compliancy	CE, REACH, RoHS 2, WEEE

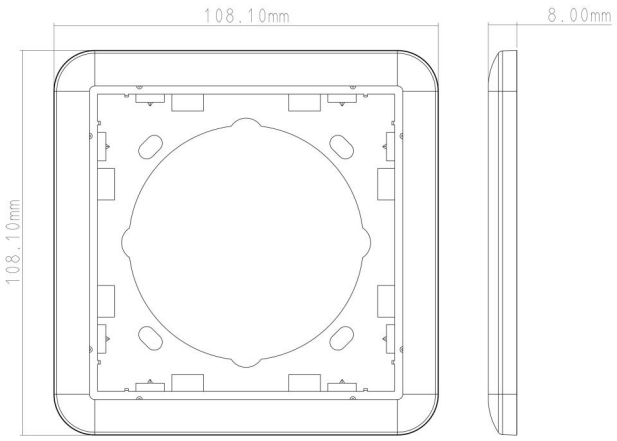

KIDDE COMMERCIAL

As a company of innovation, Kidde Global Solutions reserves the right to change product specifications without notice. For the latest product specifications, visit firesecurityproducts.com online or contact your sales representative.

Last updated on 25 March 2026 - 14:58